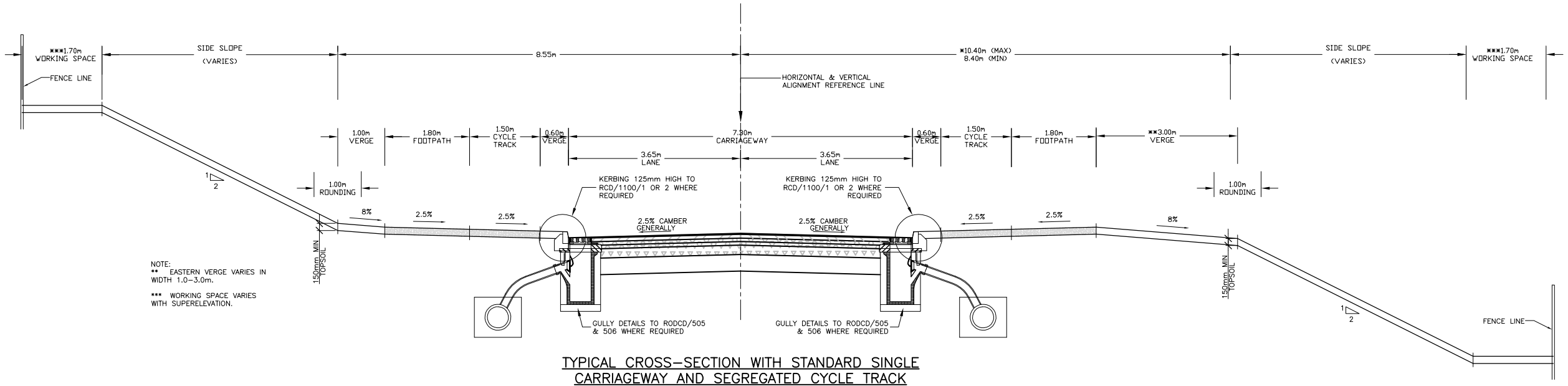

NOTE:
** EASTERN VERGE VARIES IN WIDTH 1.0–3.0m.

*** WORKING SPACE VARIES WITH SUPERELEVATION.

TYPICAL CROSS–SECTION WITH STANDARD SINGLE CARRIAGEWAY AND SEGREGATED CYCLE TRACK

SCALE 1:100 (@A3)
SCALE 1:50 (@A1)

© Ordnance Survey Ireland. All rights reserved.
Licence No. CCMA 9802 / Westmeath County Council.

NDP
National Development Plan 2007 - 2013

Department of Transport
An Roinn Iompair

Westmeath County Council
County Buildings
Mullingar
Co. Westmeath

(044) 9332000

No.	Revision	Date	By	Chk'd	App'd

Stage	Date	App'd
PRELIMINARY		
APPROVAL		
TENDER		
CONSTRUCTION		
REVIEW		

Roughan & O'Donovan
Consulting Engineers
Civil - Structural - Transportation - Environmental

Arena House, Arena Road,
Sandyford, Dublin 18.
Tel : +353 1 294 0800
Fax : +353 1 294 0820
e-mail : Info@rod.ie
www.roughanodonovan.com

Designed: LH | Checked: LH | Approved: MK | Status: PLANNING

Project Title: GARRYCASTLE BRIDGE REALIGNMENT

Drawing Title: CROSS-SECTIONS (SHEET 1 OF 3)

Drawn:	Job No:	Drawing No:	Rev:
EF	09.102	404	

Scale: (A1) AS SHOWN | Date: APRIL '09

DO NOT SCALE USE FIGURED DIMENSIONS ONLY

Ordnance Survey Ireland Licence No. EN 0007309
© Ordnance Survey Ireland/Government of Ireland.

Oct 27, 2009 - 10:12am Drawing Location: L:\acaddwg\2009\09102\Issued\Part VIII Drawings 27.10.09\404.dwg